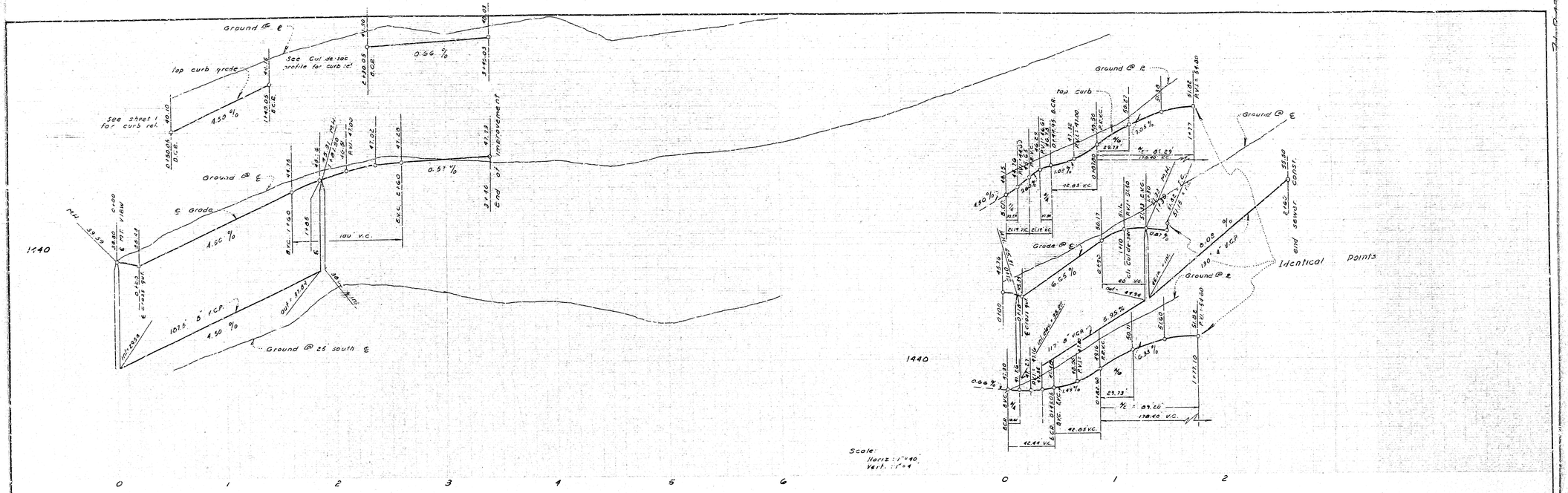

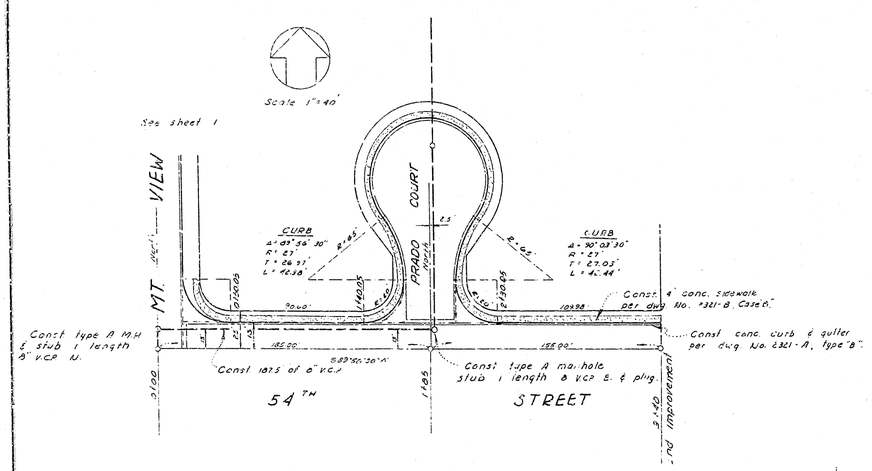

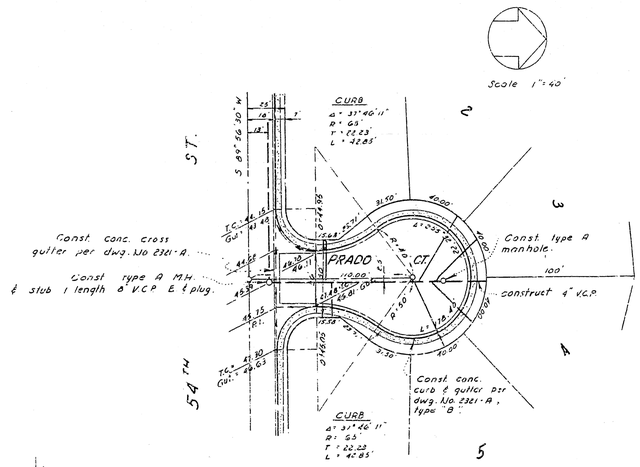

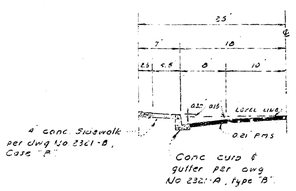

TYPICAL SECTION

54TH ST. @ 150.05 - 3+40

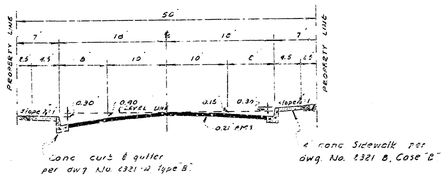

TYPICAL SECTION

DEPARTMENT OF ENGINEERING
CITY OF SAN BERNARDINO

IMPROVEMENT OF
PORTION OF MT. VIEW AND 54TH

SUBMITTED BY CAMPBELL & MILLER REFERENCE
APPROVED OCTOBER 25, 1960 DRAWN BY
Ronald E. Wolfink ENGINEER CHECKED BY
REGISTERED ENGINEER REGISTRATION NO. 2813

2813

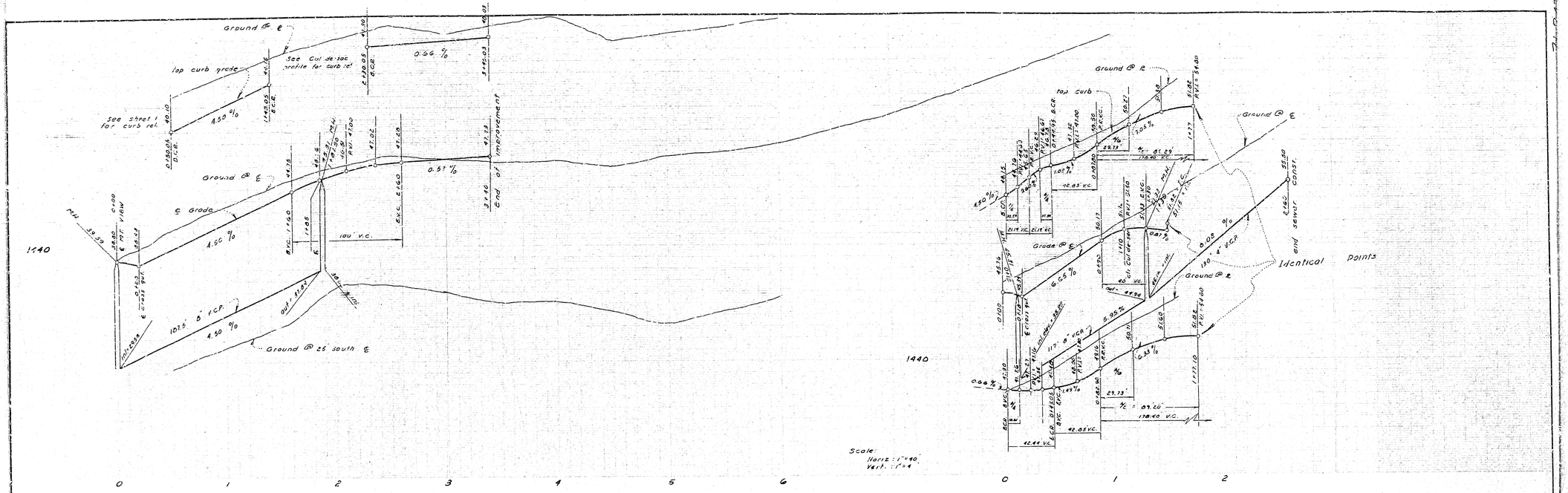

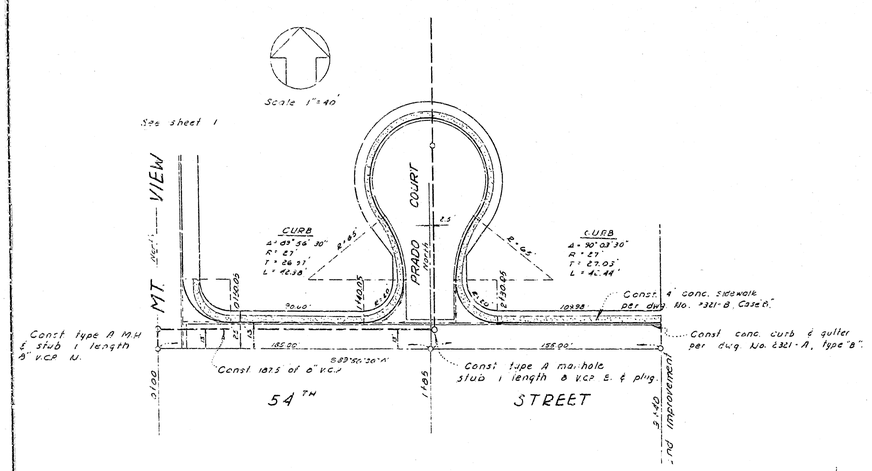

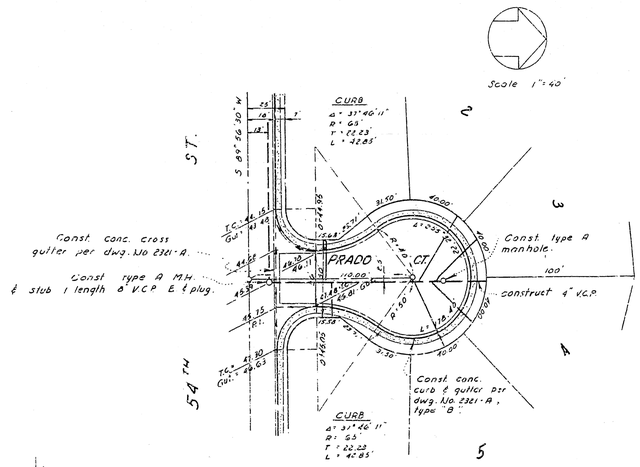

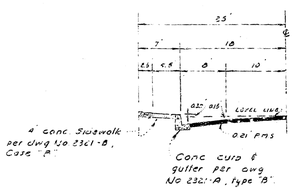

TYPICAL SECTION

54TH ST. @ 150.05 - 3+40

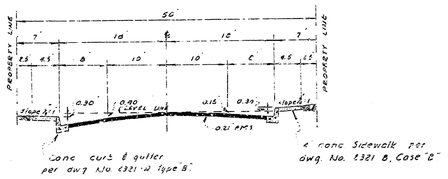

TYPICAL SECTION

DEPARTMENT OF ENGINEERING
CITY OF SAN BERNARDINO

IMPROVEMENT OF
PORTION OF MT. VIEW AND 54TH

SUBMITTED BY CAMPBELL & MILLER REFERENCE
APPROVED OCTOBER 25, 1960 DRAWN BY
Ronald E. Wolfink ENGINEER CHECKED BY
REGISTERED ENGINEER REGISTRATION NO. 2813

2813